BNBR Type

2 Flutes

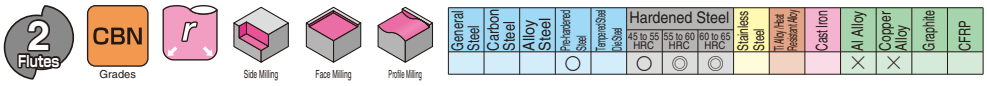

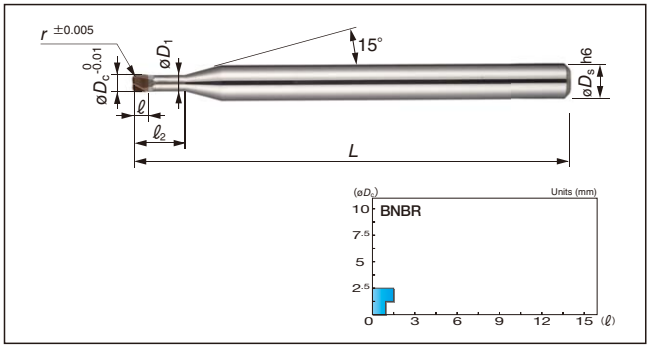

Diameter and Corner Radius Combinations

D_c	r0.05	r0.1	r0.2	r0.3	r0.5
0.2	●				
0.3	●				
0.4	●				
0.5	●	●			
1.0	●	●	●	●	
1.5		●	●	●	
2.0		●	●	●	●

Cutter Body

Catalogue No.	Stock	Dimensions (mm) øDc	r	ℓ	ℓ2	L	øD1	øDs	Wiper Edge
BNBR 2D020R005-0054	●	0.2	0.05	0.1	0.5	50	0.17	4	No
2D030R005-0054	●	0.3	0.05	0.15	0.5	50	0.27	4	
2D040R005-0054	●	0.4	0.05	0.2	0.5	50	0.37	4	
2D050R005-0054	●	0.5	0.05	0.3	0.5	50	0.47	4	
2D050R005-0154	●	0.5	0.05	0.3	1.5	50	0.47	4	
BNBR 2D050R005-0254	●	0.5	0.05	0.3	2.5	50	0.47	4	No
2D050R010-0154	●	0.5	0.10	0.3	1.5	50	0.47	4	
2D050R010-0254	●	0.5	0.10	0.3	2.5	50	0.47	4	
2D100R005-0304	●	1.0	0.05	0.7	3.0	50	0.97	4	Yes
2D100R005-0504	●	1.0	0.05	0.7	5.0	50	0.97	4	
BNBR 2D100R010-0304	●	1.0	0.10	0.7	3.0	50	0.97	4	Yes
2D100R010-0504	●	1.0	0.10	0.7	5.0	50	0.97	4	
2D100R020-0304	●	1.0	0.20	0.7	3.0	50	0.97	4	
2D100R020-0504	●	1.0	0.20	0.7	5.0	50	0.97	4	
2D100R030-0304	●	1.0	0.30	0.7	3.0	50	0.97	4	
BNBR 2D100R030-0504	●	1.0	0.30	0.7	5.0	50	0.97	4	Yes
2D150R010-0454	●	1.5	0.10	1.2	4.5	50	1.47	4	
2D150R010-0754	●	1.5	0.10	1.2	7.5	50	1.47	4	
2D150R020-0454	●	1.5	0.20	1.2	4.5	50	1.47	4	
2D150R020-0754	●	1.5	0.20	1.2	7.5	50	1.47	4	
BNBR 2D150R030-0454	●	1.5	0.30	1.2	4.5	50	1.47	4	Yes
2D150R030-0754	●	1.5	0.30	1.2	7.5	50	1.47	4	
2D200R010-0604	●	2.0	0.10	1.5	6.0	50	1.97	4	
2D200R020-0604	●	2.0	0.20	1.5	6.0	50	1.97	4	
2D200R030-0604	●	2.0	0.30	1.5	6.0	50	1.97	4	
BNBR 2D200R050-0604	●	2.0	0.50	1.5	6.0	50	1.97	4	Yes

Grade BNX20

Endmill identification

BNBR 2 D050 R010 - 015 4

No. of flutes | Diameter | Radius of ballnose | Length from neck to tip | Diameter of shank

Recommended Cutting Conditions

(1) For stable machining, a more rigid machine is recommended.
(2) Non-water soluble coolant recommended. Supply as a mist or externally. Take fire prevention precautions to avoid fire hazards caused by sparks igniting during machining or tool breakage.
(3) Shorten overhang as much as possible.
(4) Adjust cuttings conditions as necessary as machine rigidity and other conditions may vary.
(5) Depth of cut shown in the table of conditions are maximum depths. Adjust the actual depth of cut to the desired machined surface finish.

Work Material			STAVAX、NAK80、SKD61 (Up to 52HRC)				ELMAX, DC53, SKD11 Modified (Up to 62HRC)				YXR3, SKH (Up to 70HRC)			
Diameter (mm)	Corner R (mm)	Length below neck (mm)	Spindle Speed (min⁻¹)	Feed Rate (mm/min)	ap(mm)	ae(mm)	Spindle Speed (min⁻¹)	Feed Rate (mm/min)	ap(mm)	ae(mm)	Spindle Speed (min⁻¹)	Feed Rate (mm/min)	ap(mm)	ae(mm)
0.2	0.05	0.5	40,000	400	0.005	0.03	40,000	400	0.005	0.03	40,000	250	0.005	0.02
0.3	0.05	0.5	40,000	500	0.010	0.05	40,000	500	0.010	0.05	40,000	300	0.005	0.03
0.4	0.05	0.5	40,000	600	0.015	0.1	40,000	600	0.015	0.1	40,000	400	0.01	0.05
0.5	0.05	0.5	40,000	600	0.02	0.15	40,000	600	0.02	0.15	40,000	400	0.01	0.1
	0.05	1.5	40,000		0.02	0.1	40,000		0.02	0.1	35,000			0.05
	0.1		40,000				40,000				35,000			
	0.05	2.5	40,000		0.01	0.05	40,000		0.01	0.05	35,000			
	0.1		40,000				40,000				35,000			
1.0	0.05	3.0	35,000	800	0.03	0.3	35,000	800	0.03	0.2	30,000	600	0.01	0.1
	0.1		35,000				35,000				30,000			
	0.2		35,000				35,000				30,000			
	0.3		35,000				35,000				30,000			
	0.05	5.0	35,000		0.02	0.2	35,000		0.02	0.1	30,000		0.01	0.1
	0.1		35,000				35,000				30,000			
	0.2		35,000				35,000				30,000			
	0.3		35,000				35,000				30,000			
1.5	0.1	4.5	26,000	800	0.03	0.5	26,000	800	0.03	0.3	20,000	600	0.02	0.3
	0.2		26,000				26,000				20,000			
	0.3		26,000				26,000				20,000			
	0.1	7.5	26,000		0.03	0.5	26,000	800	0.03	0.3	20,000	600	0.02	0.3
	0.2		26,000				26,000				20,000			
	0.3		26,000				26,000				20,000			
2.0	0.1	6.0	20,000	800	0.03	0.7	20,000	800	0.03	0.7	15,000	600	0.03	0.7
	0.2		20,000				20,000				15,000			
	0.3		20,000				20,000				15,000			
	0.5		20,000				20,000				15,000			

BNBP Type

2 Flutes | CBN (Grades) | R | Side Milling | Face Milling | R | Profile Milling

General Steel	Carbon Steel	Alloy Steel	Pre-hardened Steel	Tempered Steel / Die Steel	Hardened Steel 45 to 55 HRC	Hardened Steel 55 to 60 HRC	Hardened Steel 60 to 65 HRC	Stainless Steel	Ti Alloy / Heat Resistant Alloy	Cast Iron	Al Alloy	Copper Alloy	Graphite	CFRP
			○		○	◎	◎				×	×		

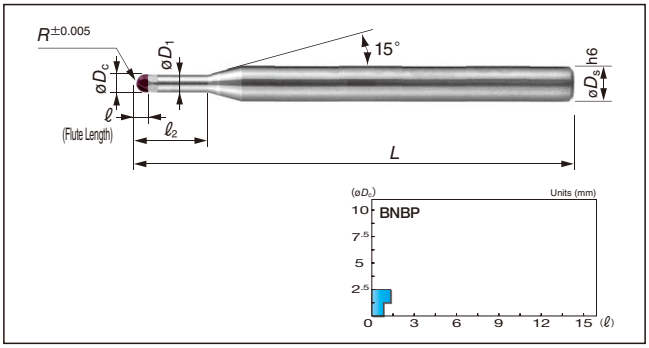

- Utilizing CBN SUMIBORON BN350 for excellent fracture resistance!
- Achieving longer tool life in high speed, high precision machining of pre-hardened and hardened steel! (up to HRC70)

Cutter Body (ø4mmShank)

Cat No.	Stock	Dimensions (mm) R	øDc	ℓ	ℓ2	L	øD1	øDs
BNBP 2R020-0124	●	0.20	0.4	0.3	1.2	50	0.37	4
2R020-0204	●	0.20	0.4	0.3	2.0	50	0.37	4
2R020-0304	●	0.20	0.4	0.3	3.0	50	0.37	4
2R020-0404	●	0.20	0.4	0.3	4.0	50	0.37	4
2R030-0154	●	0.30	0.6	0.4	1.5	50	0.57	4
BNBP 2R030-0204	●	0.30	0.6	0.4	2.0	50	0.57	4
2R030-0304	●	0.30	0.6	0.4	3.0	50	0.57	4
2R030-0404	●	0.30	0.6	0.4	4.0	50	0.57	4
2R030-0504	●	0.30	0.6	0.4	5.0	50	0.57	4
2R030-0604	●	0.30	0.6	0.4	6.0	50	0.57	4
BNBP 2R050-0254	●	0.50	1.0	0.6	2.5	50	0.97	4
2R050-0304	●	0.50	1.0	0.6	3.0	50	0.97	4
2R050-0404	●	0.50	1.0	0.6	4.0	50	0.97	4
2R050-0604	●	0.50	1.0	0.6	6.0	50	0.97	4
2R050-0804	●	0.50	1.0	0.6	8.0	50	0.97	4
BNBP 2R075-0404	●	0.75	1.5	0.9	4.0	50	1.47	4
2R100-0554	●	1.00	2.0	1.4	5.5	50	1.97	4
2R100-0804	●	1.00	2.0	1.4	8.0	50	1.97	4

Grade BN350

Cutter Body (ø6mmShank)

Cat No.	Stock	Dimensions (mm) R	øDc	ℓ	ℓ2	L	øD1	øDs
BNBP 2R020-0126	●	0.20	0.4	0.3	1.2	50	0.37	6
2R030-0156	●	0.30	0.6	0.4	1.5	50	0.57	6
2R050-0256	●	0.50	1.0	0.6	2.5	50	0.97	6
2R075-0406	●	0.75	1.5	0.9	4.0	50	1.47	6
2R100-0556	●	1.00	2.0	1.4	5.5	50	1.97	6

Grade BN350

Endmill identification

BNBP 2 R030 - 015 4

No. of flutes | Radius of ballnose | Length from neck to tip | Diameter of shank

Recommended Cutting Conditions

(1) For stable machining, a more rigid machine is recommended.
(2) Non-water soluble coolant recommended. Supply as a mist or externally. Take fire prevention precautions to avoid fire hazards caused by sparks igniting during machining or tool breakage.
(3) Shorten overhang as much as possible.
(4) Adjust cuttings conditions as necessary as machine rigidity and other conditions may vary.
(5) Depth of cut shown in the table of conditions are maximum depths. Adjust the actual depth of cut to the desired machined surface finish.

Work Material		STAVAX, NAK80, SKD61 (Up to 52HRC)				DC53-SKD11 Modified (Up to 62HRC)				SKH (Up to 70HRC)			
R(mm)	ℓ2(mm)	Spindle Speed (min⁻¹)	Feed Rate (mm/min)	ap(mm)	pf(mm)	Spindle Speed (min⁻¹)	Feed Rate (mm/min)	ap(mm)	pf(mm)	Spindle Speed (min⁻¹)	Feed Rate (mm/min)	ap(mm)	pf(mm)
0.2	1.2	40,000	1,000	0.005	0.010	40,000	800	0.005	0.010	40,000	600	0.005	0.005
	2.0	40,000	800	0.005	0.010	40,000	600	0.005	0.010	40,000	400	0.005	0.005
	3.0	40,000	600	0.005	0.010	40,000	500	0.005	0.010	40,000	300	0.005	0.005
	4.0	40,000	500	0.005	0.010	40,000	400	0.005	0.005	40,000	200	0.005	0.005
0.3	1.5	40,000	1,600	0.020	0.020	40,000	1,400	0.010	0.020	40,000	1,200	0.010	0.020
	2.0	40,000	1,500	0.010	0.020	40,000	1,300	0.010	0.020	40,000	1,100	0.010	0.010
	3.0	40,000	1,400	0.010	0.020	40,000	1,200	0.010	0.020	40,000	1,000	0.010	0.010
	4.0	30,000	1,200	0.010	0.010	30,000	1,000	0.010	0.010	30,000	700	0.005	0.010
	5.0	30,000	800	0.010	0.010	30,000	700	0.005	0.010	30,000	600	0.005	0.005
	6.0	30,000	600	0.005	0.010	30,000	500	0.005	0.005	30,000	400	0.005	0.005
0.5	2.5	40,000	2,800	0.040	0.050	40,000	2,800	0.030	0.040	40,000	2,200	0.020	0.030
	3.0	40,000	2,600	0.040	0.050	40,000	2,600	0.030	0.040	40,000	2,100	0.020	0.030
	4.0	40,000	2,400	0.030	0.050	40,000	2,400	0.020	0.030	40,000	2,000	0.020	0.020
	6.0	25,000	1,500	0.020	0.030	25,000	1,500	0.010	0.020	25,000	1,300	0.010	0.010
	8.0	16,000	1,200	0.020	0.020	16,000	1,100	0.010	0.020	16,000	850	0.010	0.010
0.75	4.0	32,000	2,400	0.030	0.030	32,000	2,200	0.020	0.030	32,000	2,000	0.020	0.020
1.0	5.5	40,000	4,000	0.050	0.050	40,000	4,000	0.030	0.030	40,000	3,000	0.020	0.030
	8.0	32,000	3,000	0.030	0.050	32,000	2,600	0.020	0.030	32,000	2,200	0.010	0.020

BNBC Type

2 Flutes

2 Flutes | CBN (Grades) | R | Side Milling | Face Milling | R | Profile Milling

General Steel	Carbon Steel	Alloy Steel	Pre-hardened Steel	Tempered Steel / Die Steel	Hardened Steel 45 to 55 HRC	Hardened Steel 55 to 60 HRC	Hardened Steel 60 to 65 HRC	Stainless Steel	Ti Alloy / Heat Resistant Alloy	Cast Iron	Al Alloy	Copper Alloy	Graphite	CFRP
												◎		

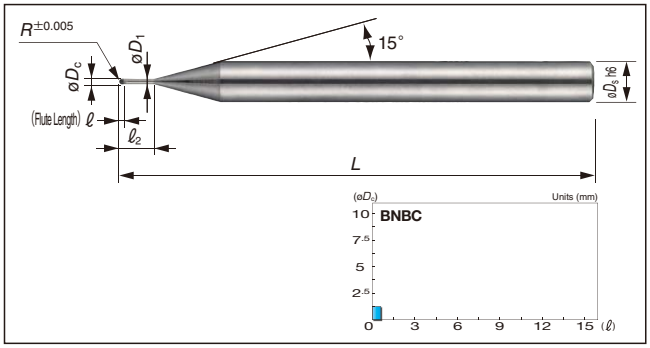

Endmill identification

BNBC 2 R030 - 010 4

No. of flutes | Radius of ballnose | Length from neck to tip | Diameter of shank

Endmills

(Unit: mm)

Cat No.	Stock	Dimensions (mm)						
		R	$øD_c$	ℓ	ℓ_2	L	$øD_1$	$øD_s$
BNBC 2R010-0034	●	**0.1**	**0.2**	0.2	0.3	50	0.17	4
2R010-0104	●	**0.1**	**0.2**	0.2	1.0	50	0.17	4
2R020-0054	●	**0.2**	**0.4**	0.3	0.5	50	0.37	4
2R020-0204	●	**0.2**	**0.4**	0.3	2.0	50	0.37	4
2R030-0104	●	**0.3**	**0.6**	0.4	1.0	50	0.57	4
BNBC 2R030-0304	●	**0.3**	**0.6**	0.4	3.0	50	0.57	4
2R050-0304	●	**0.5**	**1.0**	0.6	3.0	50	0.97	4

*Endmills with a nose radius of 0.3mm or greater are available as long-neck flutes. Please contact us for details.

Grade BN700

Recommended Cutting Conditions

(1) For stable machining, a more rigid machine is recommended.
(2) Non-water soluble coolant recommended. Supply as a mist or externally.
Take fire prevention precautions to avoid fire hazards caused by sparks igniting during machining or tool breakage.
(3) Shorten overhang as much as possible.
(4) Adjust cuttings conditions as necessary as machine rigidity and other conditions may vary.
(5) Depth of cut shown in the table of conditions are maximum depths. Adjust the actual depth of cut to the desired machined surface finish.

● Side Milling

Work Material / Cutting Conditions / Cat No.	Copper Alloy			
	Spindle Speeds (min⁻¹)	Feed Rate (mm/min)	Depth of cut (mm) a_p	Depth of cut (mm) p_f
BNBC 2R010-0034	20,000 -50,000	350	0.01	0.02
2R010-0104		350	0.007	0.015
BNBC 2R020-0054	20,000 -50,000	800	0.025	0.05
2R020-0204		700	0.02	0.03
BNBC 2R030-0104	20,000 -50,000	1,400	0.05	0.15
2R030-0304		1,200	0.04	0.1
BNBC 2R050-0304	20,000 -50,000	2,200	0.15	0.35